AGFIRST ENGINEERING .

EFFLUENT CONTROLLER

Ver: 4

Instruction & Installer's Manual

Manufactured by

Corkill Systems Ltd

"specialists in Automation Solutions"

5 Tasman St, PO Box 16 Opunake, Taranaki, New Zealand.

Phone (06) 761 7531 Fax (06) 761 7336
Email : info@corkillsystems.co.nz
A Telarc Q-base registered company

AgFirst

EFFULENT CONTROLLER

INSTRUCTIONS

AND INSTALLERS MANUAL

The AgFirst Effluent Irrigation Controller as a total standalone controller able to automate and protect the components of the effluent system.

INTRODUCTION

The AgFirst Effluent Irrigation Control System is driven by a CROUZET MILLENNIUM Smart Logic controller which Controls the motors of the effluent system to provides protection for both the system and the environment.

The system is C-Tick/RCM Compliant and runs of a Three phase supply (neutral not required).
The system consists of a main control box fitted beside the irrigation pond and comes with a remote station to mount in a position to make it easier for the operator to control.

Additionally, the system may be fitted with a variable speed drive for pump motors exceeding 7.5KW, If supplied the system will come with a Danfoss FC 202 Aqua dive.
It is not recommended to connect the unit via an Earth Leakage device (RCD) (but if required to install the unit on an RCD the use of a type A/B RCD is required to avoid nuisance tripping); the controller monitors earth constantly to protect the motors and has an earth leakage of approximately 8 milliamps. Nuisance tripping of the RCD's can be rectified by turning of the internal RFI filter within the drive.

INSTALLATION

The Main Controller The supply cable is intended to be run directly to the main control from the supply and the terminations for the main pump (VSD or DOL) and the stirrer motor all wire back to there

The Remote Push-Button Station. The Multi-core cable between the remote station and the main control box requires 11 cores for the remote function of the irrigator and 13 with the addition of green wash function.

We recommend 1.5mm wire to avoid voltage drop. All the control signals are 24vdc low voltage.
It is advisable to run the cable inside a conduit or Alkathene so this cable can easily be replaced in future. Refer to the wiring diagram provided for wire connections.
Numbering on the terminal connections is used to identify all the connection points.

The Harvest connection. The harvest terminals are for connection to a remote monitoring and control device such as a Harvest ITU terminal for control of the system from a smart device remotely.

The Kelco Pump Controller is used as a pump protection device.

Wiring the Kelco to the AgFirst Control Box requires 5 cores and typically a 7c+E .75 mm cable is used, refer Pg13/14/15 for wiring connections.

There are two Kelco Pump Controller models available. The model provided depends on where and how the pump is being used.

A Kelco E30 is used as pump protection in iron sand areas. This model detects water pressure only. A priming solenoid valve must therefore be fitted to protect the pump from running dry. The solenoid valve is wired separately and connects to Relay 2 NO terminals on the Kelco.

A Kelco F60 is used as pump protection and detects both pressure and flow. This model does not require a priming solenoid to be fitted as it is able to sense water flow.

Function of Operation of the Kelco unit.
When the pump is started the Kelco is powered on by the smart logic controller at this point the Kelco will start the start-up timer to allow the system to prime.

During the start-up timer until the system reaches the minimum pressure (E30 only) a solenoid will operate to keep the pump lubricated to avoid dry running, the F60 has a paddle that will detect flow and know the pump is not running dry.

Once the start-up timer has elapsed if the system has not met the minimum pressure or received flow the system will trip.

The Kelco will also trip on over pressure or loss of flow during operation (f60 only)

Relay 1 is programmed as pump protection and will close when the pump is in favourable conditions and open at fault conditions. There is an approximately 3sec delay between the pump switching on and the feedback signal being detected.
Relay 2 is programmed to close during low pressure when start-up to operate the Priming Solenoid Valve. This is to prevent the pump running dry and becoming damaged (E30 model only).

The program of the Kelco is dependent on the site but these parameters must be set as follows to work correctly with the AgFirst irrigation controller.
The prestart delay should be off.
The run-on timer should be turned off.

WARNING!!!: The Kelco Pump Controller provides protection to the pump. Any modification to the original program could result in severe pump damage. It should therefore only be adjusted by the installer with guidance of AgFirst Engineering. Warranty of the pump may be void.

You may test the operation of the Kelco without running the pump, you may force the power using the plc menu and watch for operation of the run output on the Kelco operating the input of the plc (please see the CORUZET MILLENNIUM programming section in the manual).

Commissioning of the system is to be done by the pump installer, but it is fine to momentarily start the system to check the wiring is correct.

To avoid accidental modification of the program we suggest the key lock is enabled in the Kelco, see below for more info:

To activate the lock on the keypad press and hold the (∧) and (∨) buttons simultaneously and then press and release the (R) button, after two seconds the display will say lock and you may now release all the buttons, you may do this again to unlock the keypad.

The DANFOSS VSD (if supplied) is designed to run the irrigation pump offering fine control of pressure and additional safety functions otherwise not available it to be supplied with circular TPS 3c+E, the motor is to be wired in EMC type screened cable using steel glands to connect the cable screens at both the drive and the terminal box to comply with C-Tick/RCM requirements. The earth conductor MUST also be attached at both ends. The motor must be wired in 400v configuration.
An example of a metal gland shown below.

Installation of metal glands and screened cables is an essential factor in lowering the SCC in the dairy plant from the reduction in stray voltage.
The minimum size of the conductors to the motors should be 1.5mm. Do not undersize cables, larger is better to assist removal of RFI.

The above is also critical if cow ID systems are in use or being contemplated. The screen should be retained over the cable as close as possible to the termination.

The Danfoss drive come's setup programmed ready for operation we recommend the motor name plate data is checked and a motor tune is performed.
The setpoint pressure level pre-set at a low level that will need to be adjusted upon commissioning.

LCP Keypad Operation and Parameter Editing

Status Display To display the current operation of the drive and all status messages of the Aquaflow press the "*Display Status*" button on the following screen display. If you keep on pressing the status display button it will scroll through the various states of the onboard PLC to check operation of unit for diagnostics.

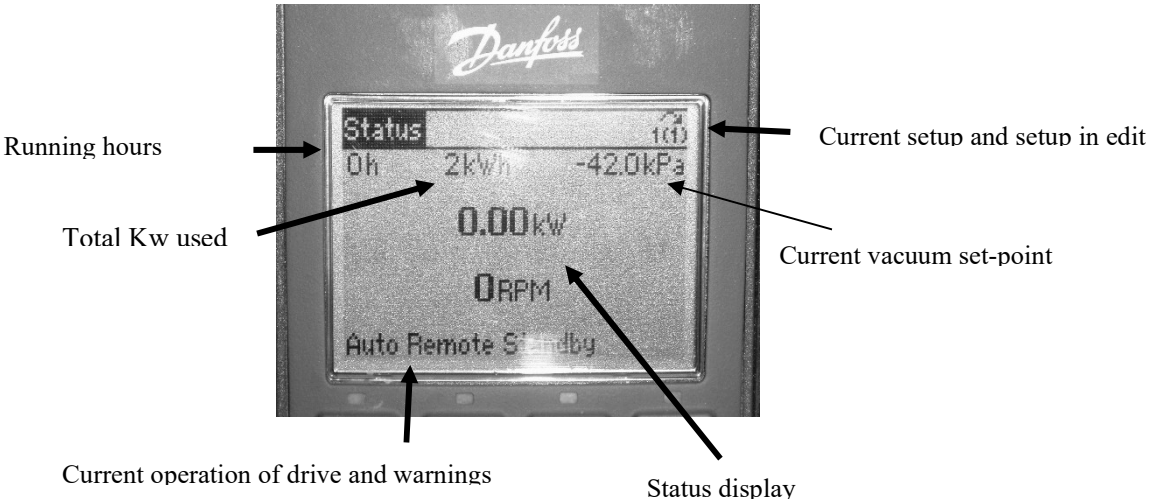

My personal menu To display the current user modifiable parameters of the drive press the "*Quick Menu*" button on the front of the lcp followed by the "*OK*" key

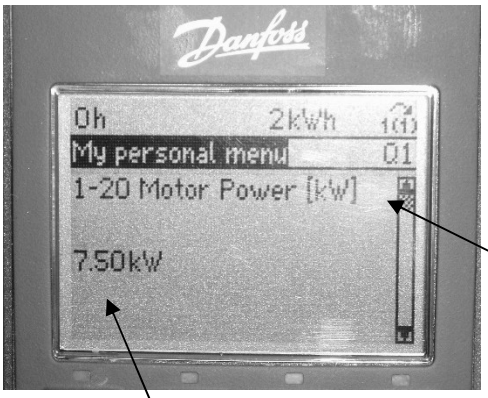

Current Parameter

Current parameter value

My personal menu These are the user modifiable parameters that are used when setting up the Aquaflow such things as motor power, pressure levels, automatic motor adaptation, motor ramp times, low and high-speed limits etc…
Pressing the up and down button will scroll through the various settings of the controller. These are the settings that are used when commissioning, all the relevant settings are in this menu to make it easy for anyone to install and set up. Pressing the "*OK*" button on any parameter will enable you to be able to change the value of the parameter in edit and press the "*OK*" button when you are finished editing it to store the value.

5. Motor Set Up and Automatic Motor Tuning

Programming To make program changes press *"Quick menu"* key on the front of the LCP followed by the *"OK"* key, press the *"Display status"* key to exit.

How to stop and start the drive using the LCP for programming to stop unintended starts the drive can be stopped by pressing the *"Off"* key on the front of the LCP pressing the *"Auto on"* key on the front of the LCP will return the unit to run mode

Extended Menu this menu is password protected, if it is necessary to access this menu, please phone Corkill Systems Limited for assistance.

Motor Set Up

With power on to the drive, press "*Off*" then the "*Quick Menu*".

Check and if necessary, set the motor parameters #120 through to #125 as above, all other set ups will automatically update.

turn on Parameter #129 "Auto Motor Adapt". Press "H*and On*"
And the drive will carry out the Auto Tuning function; a message will be displayed when tuning is complete. Press "Auto-on" before pressing *"Reset".* The Aquaflow should be ready to use.

Pressure Level Adjustment

Setting the Aquaflow pressure level

To adjust the pressure from the preset position, scroll thru the quick menu list until you find set point 1add press ok.
The drive will highlight the pressure press the keys to adjust it and press ok to store it in.

The Danfoss soft start (when supplied) Pump Controller is used as a pump protection and current ramp of the green wash pump.

The soft start should be set with the below settings:

% FLC/ ramp time 15 sec
% FLC (dependent on motor size)
% Motor FLC (250%)
Soft stop No
Motor class trip 20 (will drip within 20 sec as 6* FLC)
Phase rotation/ aux relay any/run (relay operates when the soft start is running)
Excess start time off

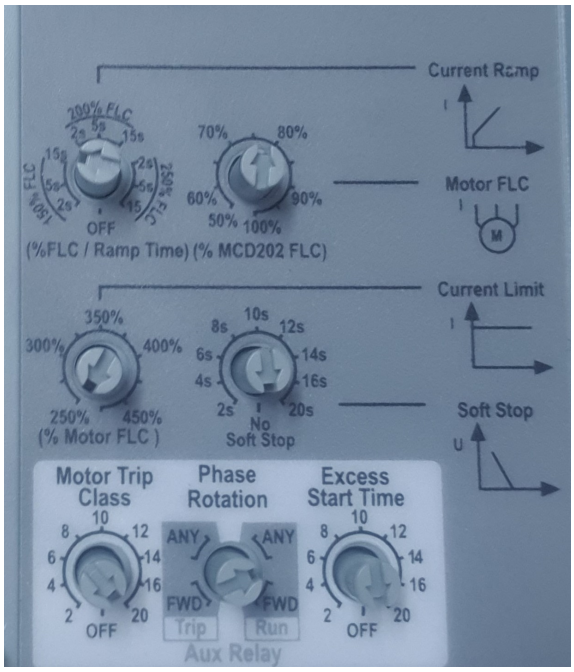

The Crouzet Smart Relay is the heart of the system the Smart logic controller operates the system based on the status of the sensors and inputs, controls timing etc. values can all be altered using the front display panel and function buttons of the logic controller.

Programming the Smart relay controller is accomplished by pressing the “A” or “B” button the various timer values and settings can be adjusted by pressing the “OK” button on the desired timer to adjust the value “OK must be pressed again to store it in and the next time the system is started the new values will become the default settings.
Use the up and down arrows to edit and change menu items.

For example, to adjust the irrigation fail to start timer
Press “A” to advance to the below screen.
Press the “OK” button to enable editing of the timer setting (the display will then flash)
Press the “+” or “-“ button to adjust the setting to the desired value.
Press the “OK” button to store the value.
You may then Press “B” to exit the menu.

For example, to switch the controller to function with a variable speed drive or direct online pump:
press “A” to advance to the below screen.
Press the “-” button to enable or disable this feature as desired.
Press the “+” or “-“ button to adjust the setting to the desired value.
Press the “OK” button to store the value.
You may then Press “B” to exit the menu.

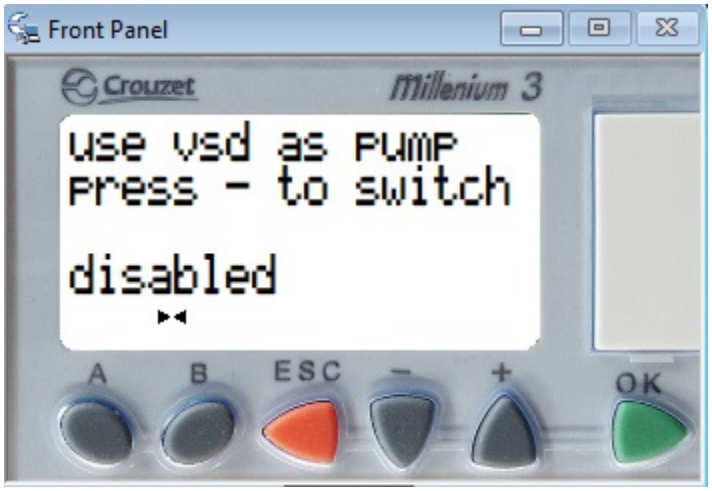

Crouzet millennium configurable parameters:

Irr fail to start timer
safety timer if the irrigation pump fails to start will stop the pump sequence

Irr fail to stop timer
safety timer if the irrigation pump fails to stop

Stir fail to start timer
safety timer to stop the Stir sequence if the pump fails to start fails.

Stir fail to stop timer
safety timer if the Stirrer fails to stop when the stir sequence has finished.

Irr flow switch fault delay timer
fault delay to ignore the irrigator flow meter's fault signal for a specified time.

Pump Start Delay
Delay timer to allow the stirrer to agitate the pond before starting the pump.

Green fail to start timer
safety timer if the green wash pump fails to start

Green fail to stop timer
safety timer if the green wash pump fails to stop.

Green flow switch fault delay timer
fault delay to ignore the green wash flow meter's fault signal for a specified time.

Run Stir in Green wash
Enable/ disable the stirrer when the green wash pump is running (used when the green wash pump is drawing of the second pond, so the stirrer keeps running).

Use VSD as pump
switch the control cabinets operation to run either a VSD or DOL pump

Force power to Kelco
force power to the Kelco switch when the system is not in operation to enable programming.

Bypass remote timer
This will bypass the external pump run timer so the system will run ignoring the pump run timer.
(Enables testing if the remote-control box has not been fitted and to bypass in case of failure of the remote timer)

Max Trips in Period
This is used to stop the system from repeated reset upon multiple faults fault once the reset counter is reached it will require a hard reset to re-enable operation (depower the controller or hold the reset button for 10 seconds)

Trips Period
The time period for the max trips in period counter the counter will be reset at this interval.

Harvest Bypass
Used to ignore faults from the harvest system if it is offline or not fitted.

Crouzet millennium Fault display
The Crouzet millennium smart relay will indicate fault conditions on the display in the event of a trip below is a list of the possible faults and their causes below is a sample fault display that indicates that the stirrer has tripped on over temp from the microtherm sensor:

Stirrer mic therm
The thermal protection bi-metallic fuse has tripped the stirrer on suspected over temperature.

Irr fail to start
The irrigator has failed to start, please check the drive or circuit breaker has not tripped.

Irr fail to stop
The irrigator has failed to stop please check the drive or contactor has not failed in the controller

Stir fail to start
The stirrer has failed to start, please check the circuit breaker has not tripped.

Stir fail to stop
The stirrer has failed to stop please check the contactor has not failed in the controller.

Irr flow trip
The Kelco flow controller has tripped the system, please see the display of the Kelco for fault indication.

Irr remote disable
The shed remote irrigator enable switch is open please check the stop input on terminal 28 for faults.

Green fail to start
The green wash pump has failed to start, please check the soft start or circuit breaker has not tripped.

Green fail to stop
The green wash pump has failed to stop, please check the soft start.

Green flow trip
The Kelco flow controller has tripped the system, please see the display of the Kelco for fault indication.

Too many trips in period
The controller has tripped to many times in a short space of time, this would indicate that the system has likely tripped on a fault that requires further investigation.

Harvest trip
The harvest system has remote tripped the irrigation controller please check the harvest system for further fault details..

Time clock programming

A. If power supply is disconnected press “OK” for one second. The display appears in Automatic-Mode.
B. Press “M”, the time switch is now in the Enter-Mode.
C. Confirm Program with “OK”.
D. Confirm new program with “OK”.
E. Choose the desired channel with “+” and or “-“ and confirm with “ok” .
F. For regular switching times choose on or off with “+” and “-“buttons and confirm with “OK” .
G. Within this level you activate the days of the week (1…7) on which the switching time should happen.
With “+” and “-“ you activate “yes” or deactivate “no” the corresponding date. Confirm each day with “OK”.
H. Adjustment of the time: you may press “+” and “-“ to adjust the hours and Press ”OK” to advance to the Minutes and adjust in the same way.
I. Verify the entered switching time: If the flashing summary of the programming step is correct, verify on or off with “OK” . After verification you have the choice between edit/delete and end with “+” and “-“ .
J. If you want to proceed with programming, confirm next switching with” OK” To leave the programming menu confirm end

Manual time clock bypass

By pushing “A” and “B” buttons or “+” and “-“ buttons simultaneously manual operation of the channels take place. The resulting switching status is marked
with the hand-symbol and remains until the next programming
step occurs. (temporary over-ride)
Permanent switching status P
By pressing the corresponding channel button for more
than 3 sec. the channel is permanently switched ON or OFF.
The status remains until the next manual switching occurs (> 3
sec.). (permanent over-ride)

Harvest Option

The harvest option is for integration of a Harvest Remote telemetry system.

The outputs of our controller are voltage free referenced to the common terminal.
The inputs of our controller are active high reference to the DC supply.

The inputs info the AgFirst Controller operate as follows:

- **Pump start /stop** (pulsed) triggered on diff up
- **Stir start /stop** (pulsed) triggered on diff up
- **Trip** (pulse or latch, expect active in trip condition)
- **Reset** (pulse for normal reset held for 10 seconds for hard reset)

The outputs from the AgFirst Control Box are as follows:

- **Trip indication** (Closed to indicate a trip condition)
- **Pump Indication** (pulse sequence or solid to indicate status)
- **Stir Indication** (pulse sequence or solid to indicate status)
- **Reset indication** (Closed to trigger a reset has been made to the harvest system)

Note: the contactors contained within this unit are rated for 7KW.
Please check the overload ratings are of the correct size for the motors prior to installation.

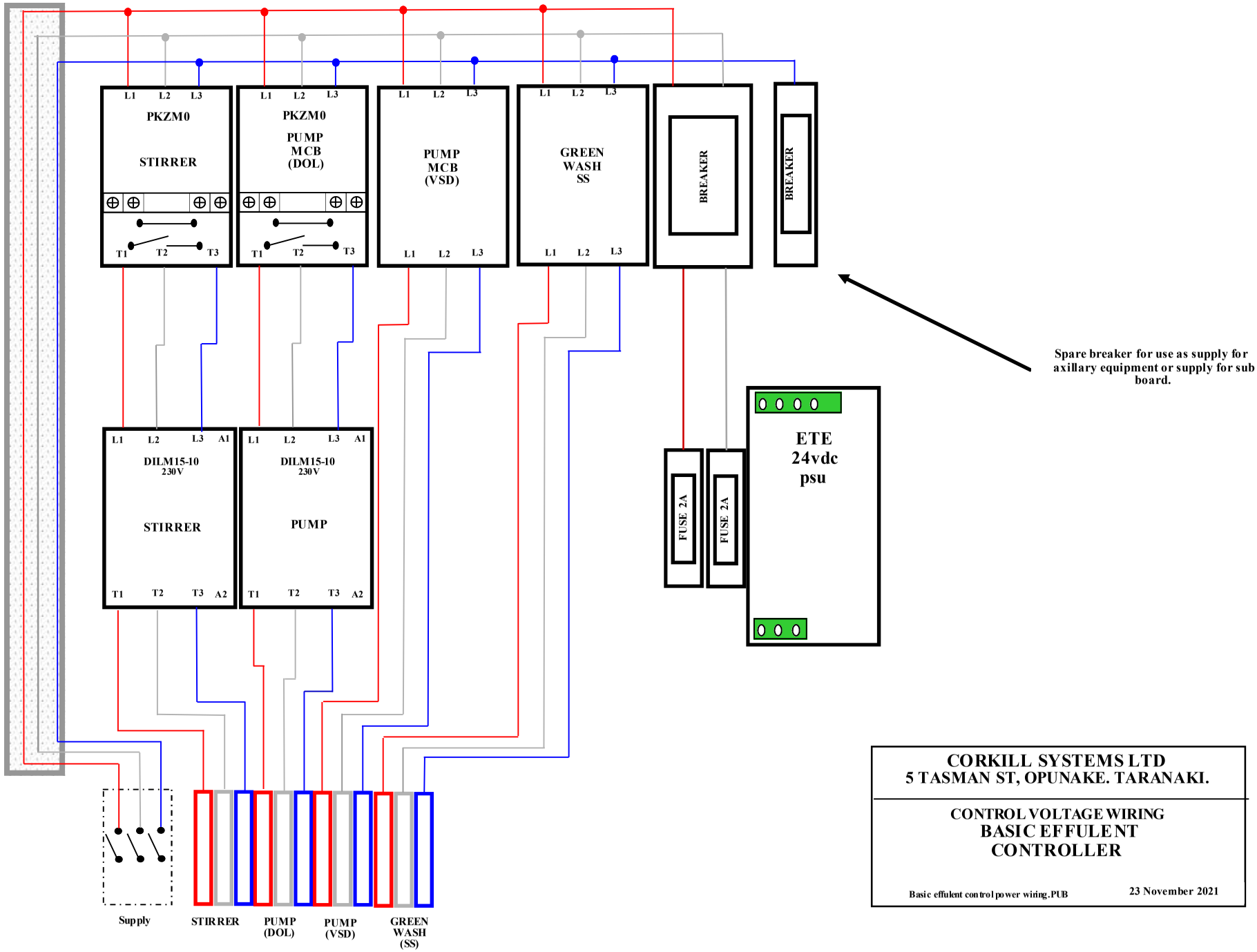

CORKILL SYSTEMS LTD
5 TASMAN ST, OPUNAKE. TARANAKI.

CONTROL VOLTAGE WIRING
BASIC EFFULENT CONTROLLER

Basic effulent control power wiring.PUB

23 November 2021

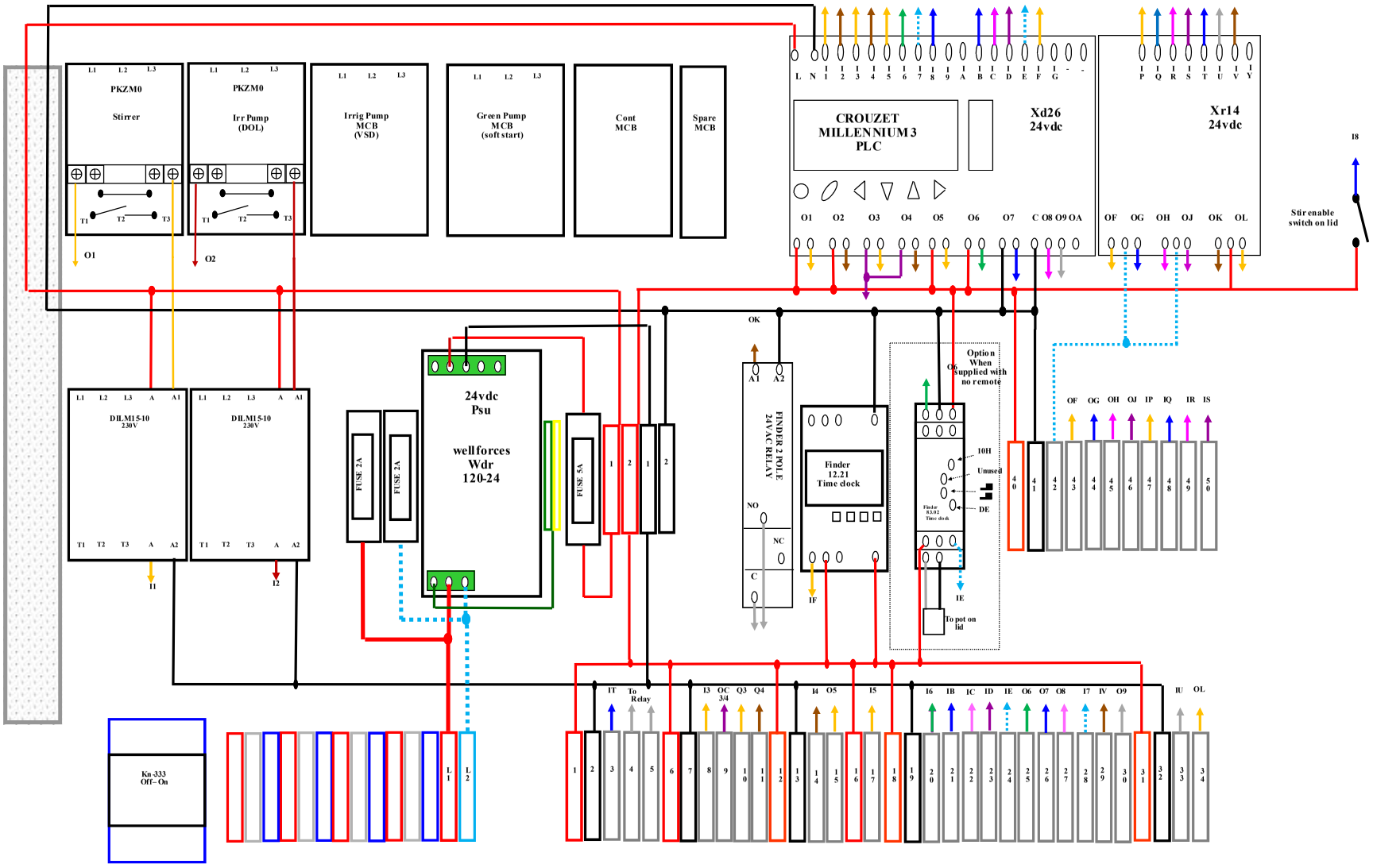

CORKILL SYSTEMS LTD
5 TASMAN ST, OPUNAKE. TARANAKI.

CONTROL VOLTAGE WIRING
BASIC EFFULENT
CONTROLLER

BASIC EFFULENT CONTROL VOLTAGE.PUB

20 January 2022

CORKILL SYSTEMS LTD
5 TASMAN ST, OPUNAKE. TARANAKI.

CONTROL VOLTAGE WIRING
BASIC EFFULENT
CONTROLLER

BASIC EFFULENT CONTROL INPUT– OUTPUT.PUB 16 December 2022

Note:
All inputs are PNP active when input is high

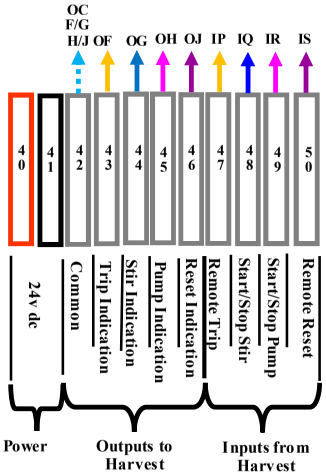

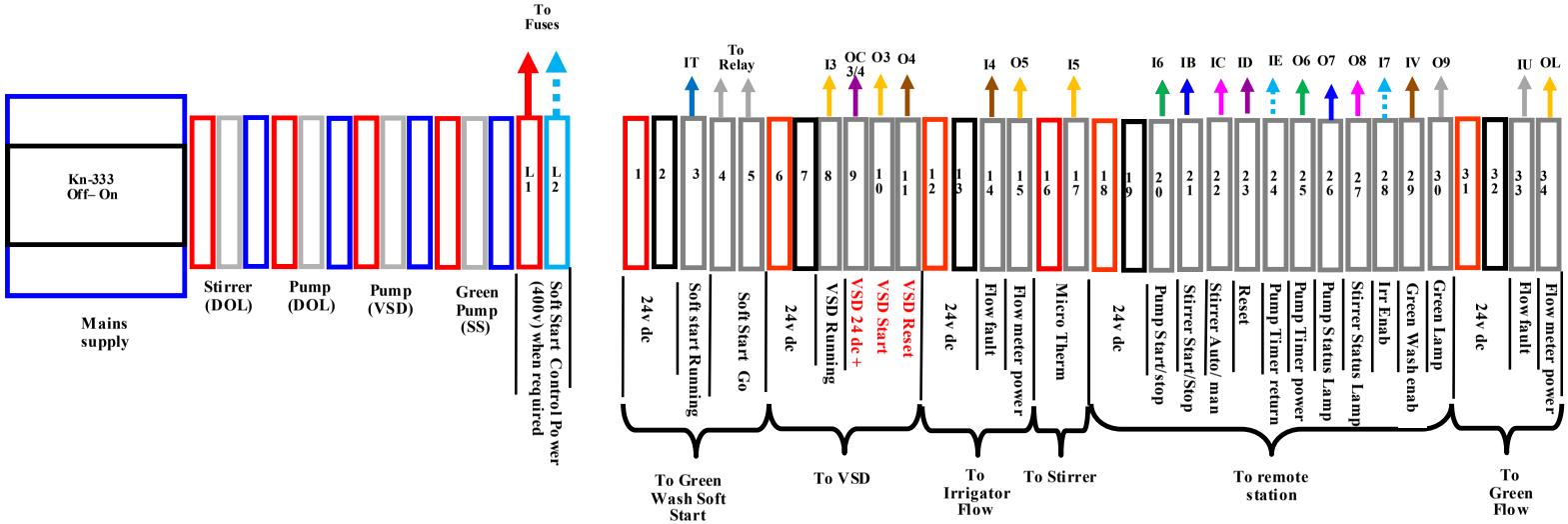

AGFIRST EFFULENT IRRIGATOR
CONTROLLER CONNECTION DIAGRAM

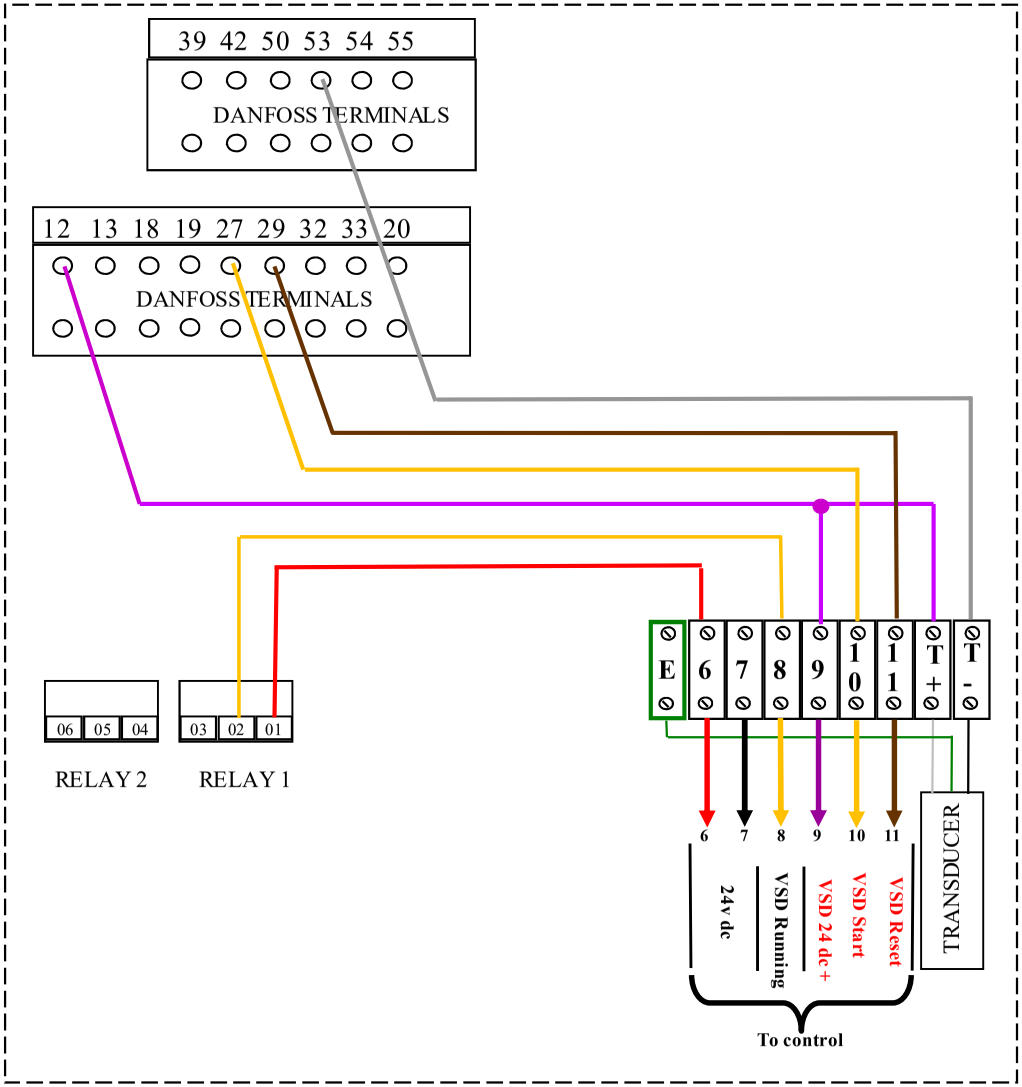

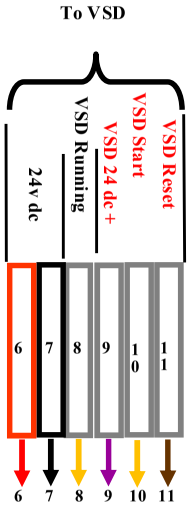

CORKILL SYSTEMS LTD
2 King St, PO Box 16
OPUNAKE, TARANAKI. NEW ZEALAND
Ph (06) 761 7531 Fax (06) 761 7336

CIRCUIT DIAGRAM FOR AGFIRST IRRIGATOR CONTROLLER

AGFIRST-IRRIGATOR-WIRE.PUB January 31, 2022

Kelco E30 wiring for irrigator

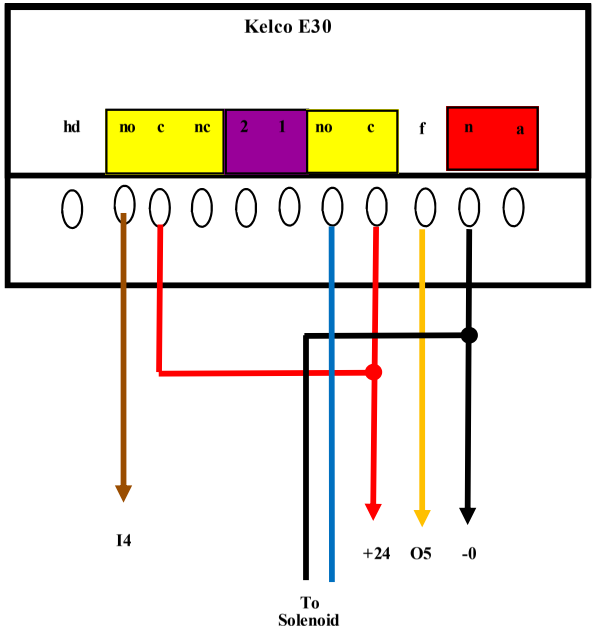

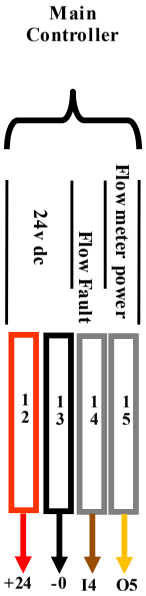

CORKILL SYSTEMS LTD
5 TASMAN ST, OPUNAKE. TARANAKI.

CONTROL VOLTAGE WIRING
BASIC EFFULENT CONTROLLER
Kelco wiring for irrigator (E30)

BASIC EFFULENT KELCO.PUB 16 December 2022

Kelco F60 wiring for irrigator

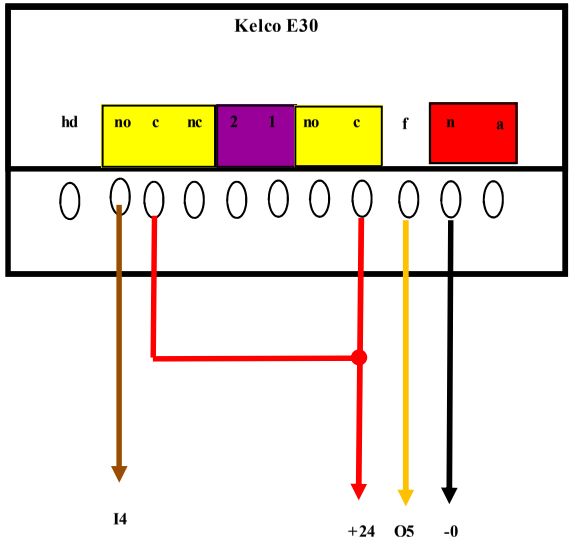

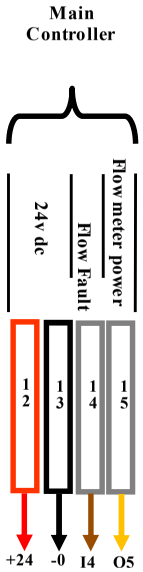

CORKILL SYSTEMS LTD
5 TASMAN ST, OPUNAKE. TARANAKI.

CONTROL VOLTAGE WIRING
BASIC EFFULENT CONTROLLER
Kelco wiring for irrigator (F60)

BASIC EFFULENT KELCO.PUB 16 December 2022

Kelco E30 wiring for green wash

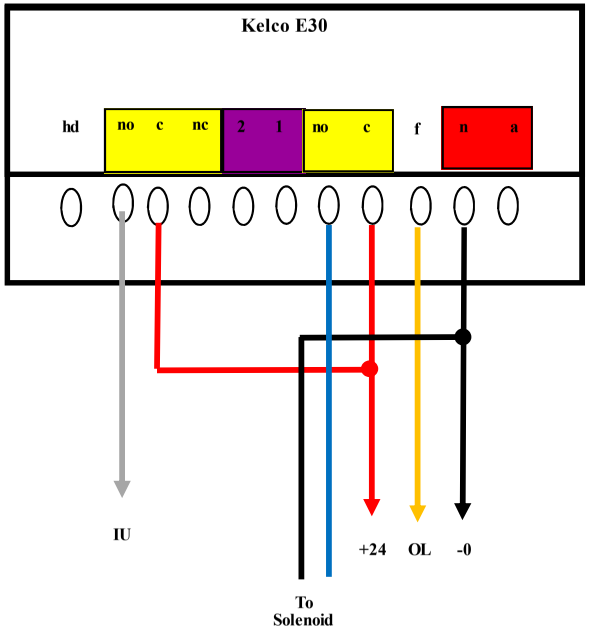

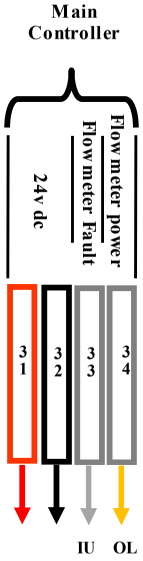

CORKILL SYSTEMS LTD
5 TASMAN ST, OPUNAKE. TARANAKI.

CONTROL VOLTAGE WIRING
BASIC EFFULENT CONTROLLER
Kelco wiring for green wash

BASIC EFFULENT KELCO.PUB 16 December 2022

Green wash Soft Start Wiring 24v control

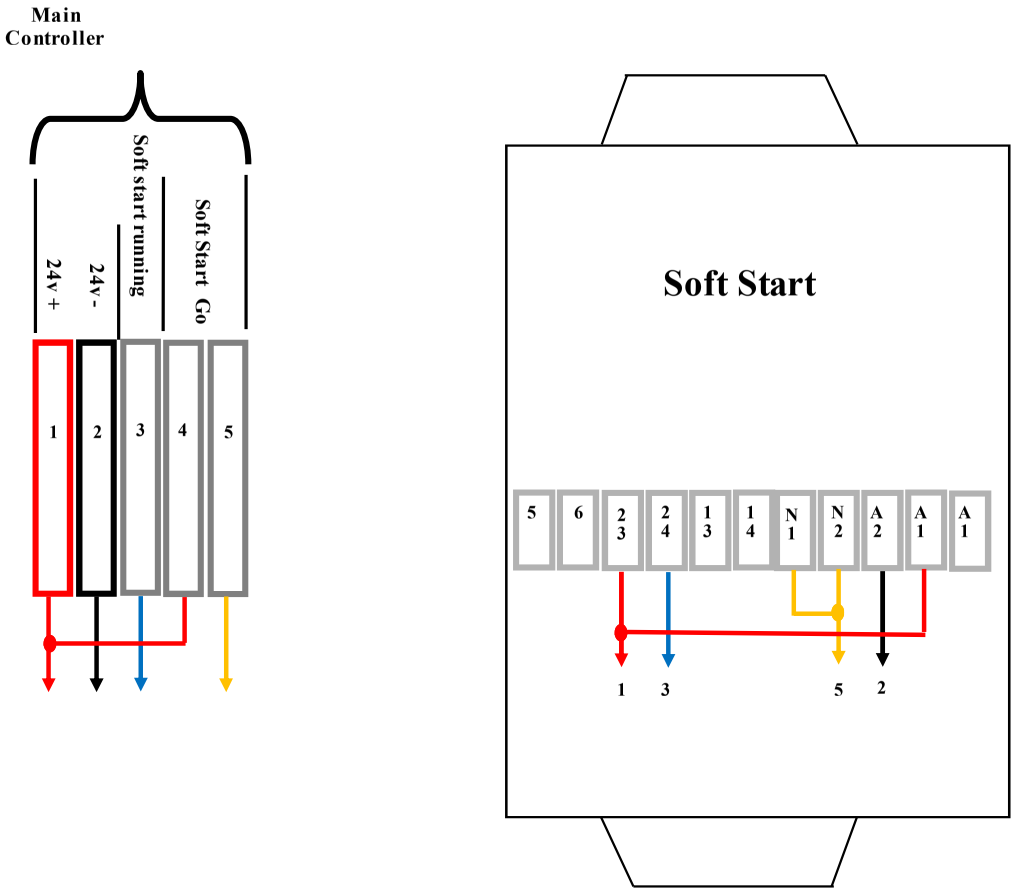

CORKILL SYSTEMS LTD
5 TASMAN ST, OPUNAKE. TARANAKI.

CONTROL VOLTAGE WIRING
BASIC EFFULENT CONTROLLER
Soft Start Wiring 24v control

BASIC EFFULENT KELCO.PUB 20 January 2022

Green wash Soft Start Wiring 400v control

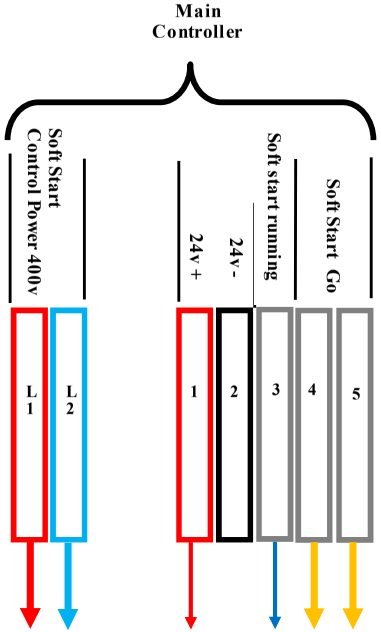

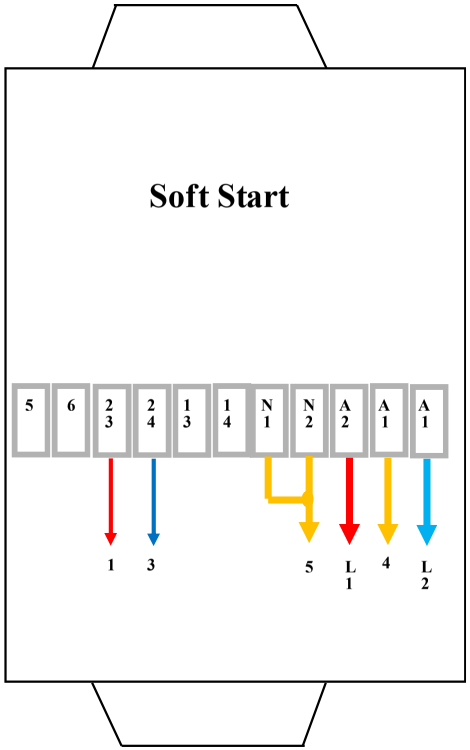

CORKILL SYSTEMS LTD 5 TASMAN ST, OPUNAKE. TARANAKI.	
CONTROL VOLTAGE WIRING BASIC EFFULENT CONTROLLER Soft Start Wiring of 400v control	
BASIC EFFULENT KELCO.PUB	20 January 2022

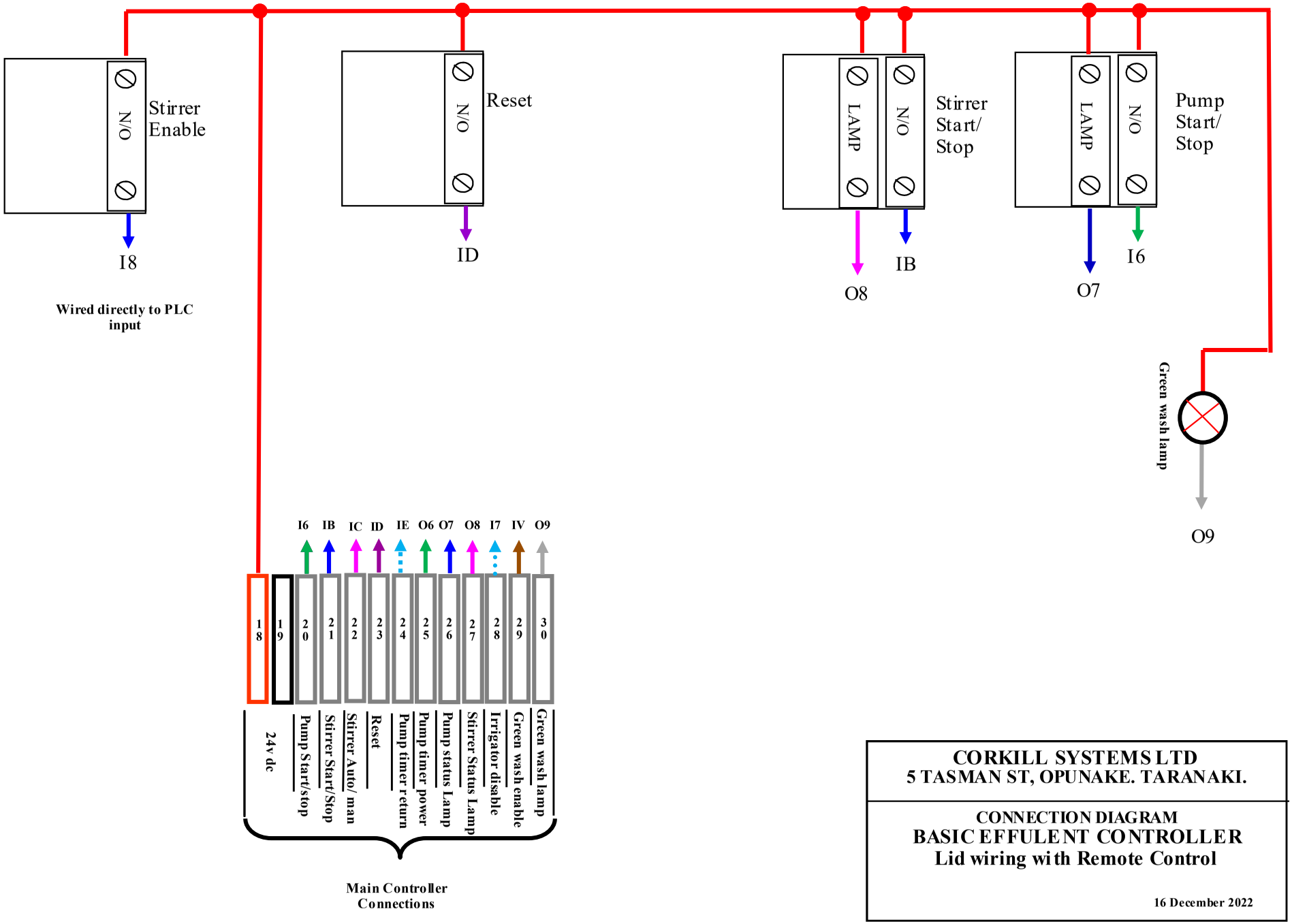

CORKILL SYSTEMS LTD
5 TASMAN ST, OPUNAKE. TARANAKI.

CONNECTION DIAGRAM
BASIC EFFULENT CONTROLLER
Lid wiring with Remote Control

16 December 2022

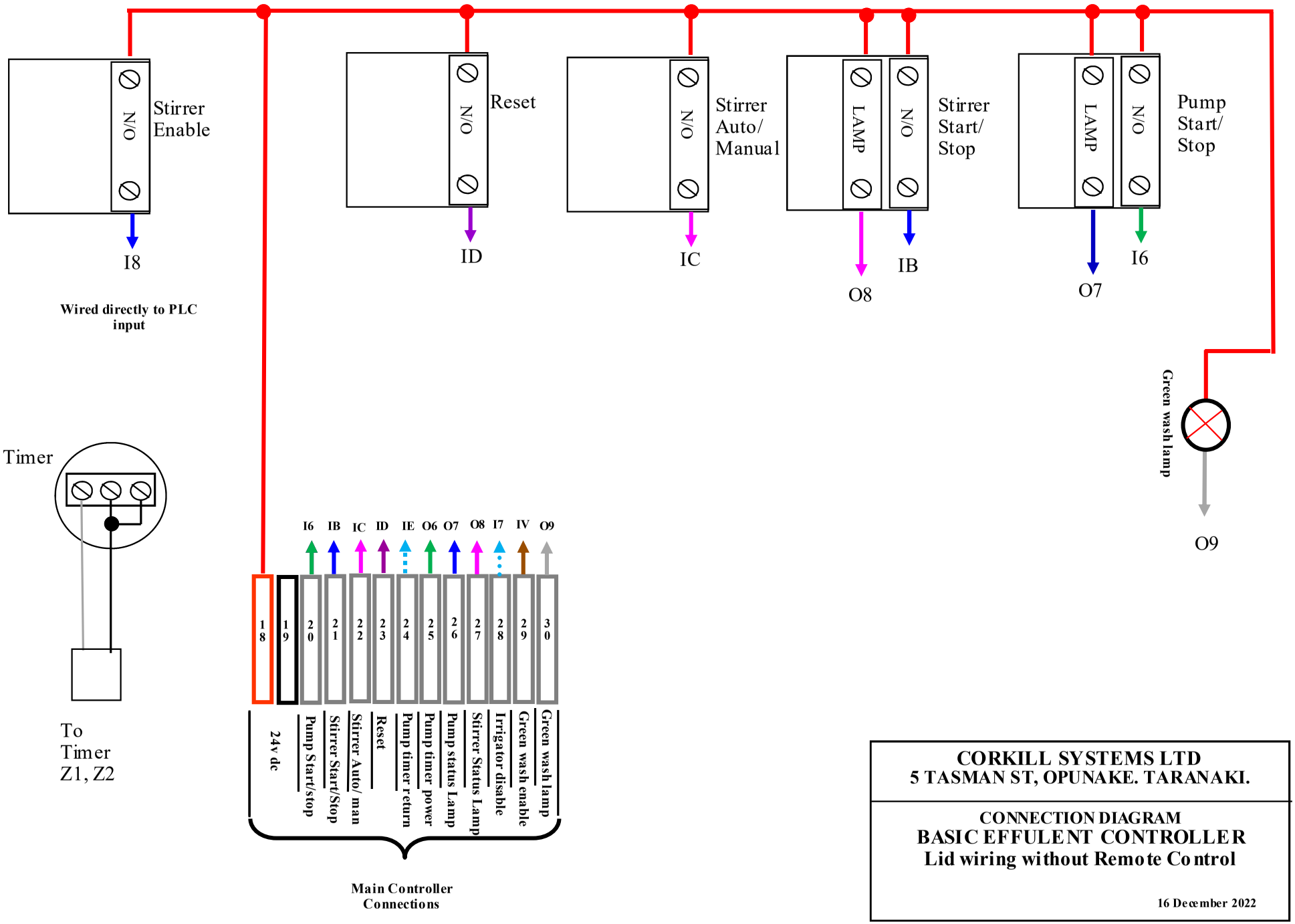

CORKILL SYSTEMS LTD
5 TASMAN ST, OPUNAKE. TARANAKI.

CONNECTION DIAGRAM
BASIC EFFULENT CONTROLLER
Lid wiring without Remote Control

16 December 2022

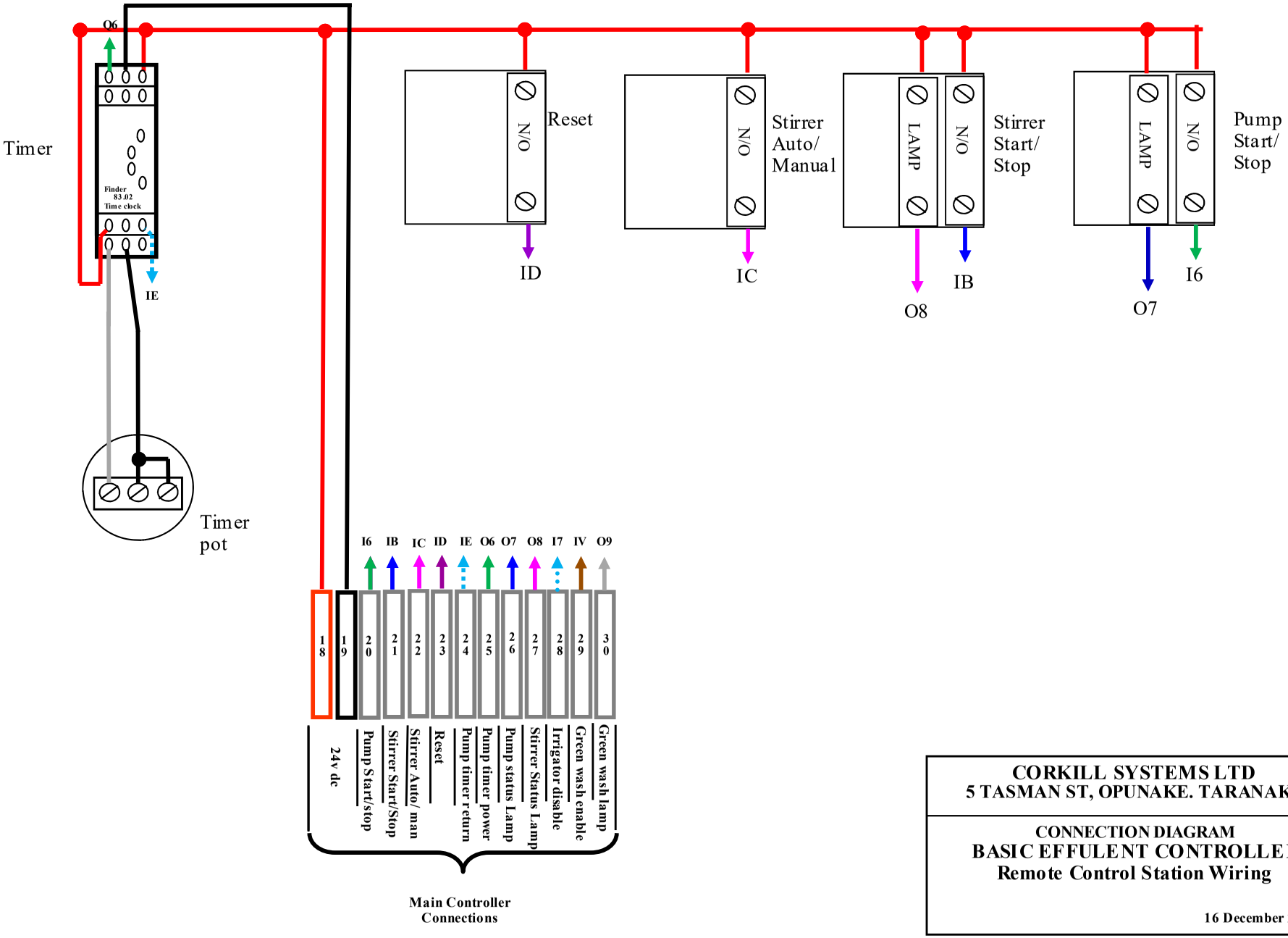

CORKILL SYSTEMS LTD
5 TASMAN ST, OPUNAKE. TARANAKI.

CONNECTION DIAGRAM
BASIC EFFULENT CONTROLLER
Remote Control Station Wiring

16 December 2022

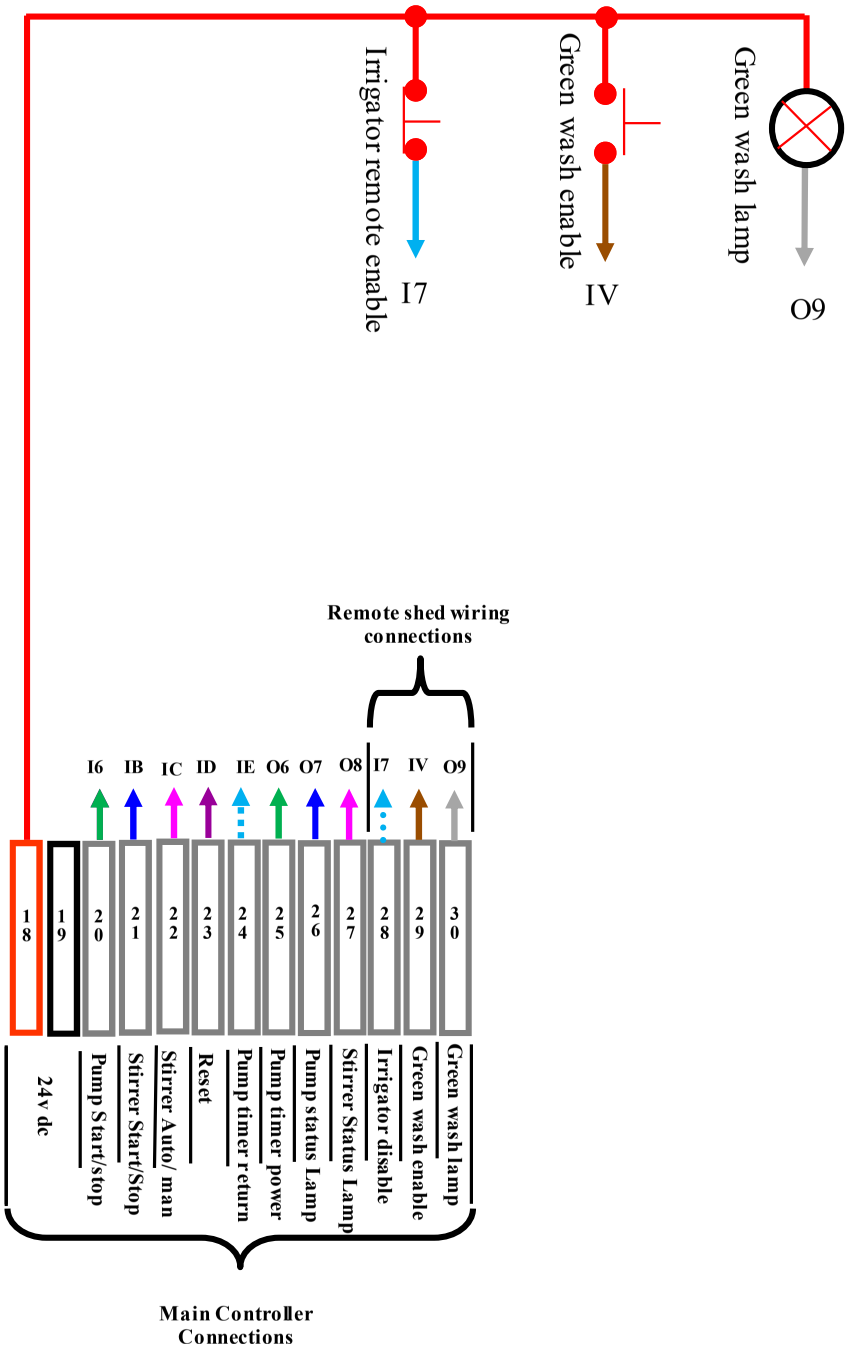

Note:
These connections can be wired directly from the shed to the remote control or directly to the irrigation controller.

CORKILL SYSTEMS LTD
5 TASMAN ST, OPUNAKE. TARANAKI.

CONNECTION DIAGRAM
BASIC EFFULENT CONTROLLER
SHED WIRING CONNECTIONS

16 December 2022

Irrigator run timer setup

Cycle timer mode.

Run timer mode

Run/ Cycle timer explanation:

The timer can be wired in different means to control how it operates.
In run timer mode the timer will be reset every start of the irrigator.

In cycle mode the irrigator will remember the
time if the irrigator is stopped and restarted during a run as long as the timer has not elapsed or the control box is depowered.

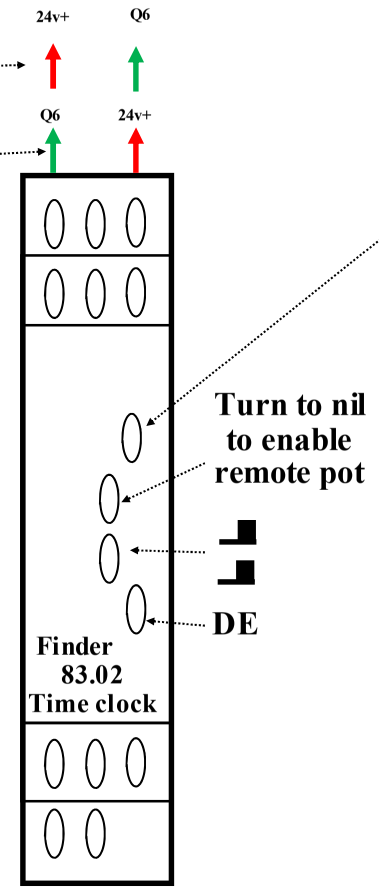

Turn to nil to enable remote pot

DE

Adjust dial to 10x to set 0-10 hour run time
or set to 1D to set 0-24 hour pump run time.

The pot on the lid of the remote or main control box inside has two scales select which is appropriate for the run time of the system.

CORKILL SYSTEMS LTD
5 TASMAN ST, OPUNAKE. TARANAKI.

CONNECTION DIAGRAM
BASIC EFFULENT CONTROLLER
Irrigator run timer setup

16 December 2022